ITEM #

MODEL #

NAME #

SIS #

AIA #

Modular Cooking Range Line EVO900 1200mm Gas Fry Top HP, Smooth and Ribbed scratch resistant chromium Plate

392407 (Z9IIMAAOMIA) Large gas fry top with 2/3 smooth and 1/3 ribbed scratch resistant chromium cooking plate, horizontal, thermostatic control, scraper included - HP (availability from Q2 2020)

Short Form Specification

Item No.

Smooth scratch resistant chromium cooking surface. 33 kW gas powered burners with thermostatic valve and self stabilizing flame. Temperature range up to 270°C. To be installed on open base installations, bridging supports or cantilever systems. Removable drawers below the cooking surface for the collection of grease and fat. Body and work top of unit entirely in stainless steel with Scotch Brite finish. Extra strength work top in heavy duty 2 mm stainless steel. Right-angled side edges to allow flush-fitting junction between units.

APPROVAL:

Main Features

- Units have 4 independent controls to regulate temperature of the cooking surface.
- Easy to clean and corrosion resistant chromium surface.
- Unit to be mounted on open base cupboards, bridging supports or cantilever systems.
- Two large drain holes on cooking surface permits the draining of fat into two separate 3 liter collectors placed under the cooking surface.
- Stainless steel high splash guards on the rear and sides of cooking surface.
- Piezo spark ignition with thermostatic valve for added safety.
- The special design of the control knob system guarantees against water infiltration.
- IPX5 water protection.
- Scratch resistant cooking surface thanks to a special treatment of the chromium plate.
- Temperature range from 90° up to 270°C.
- Suitable for countertop installation.

Construction

- Unit is 930 mm deep to give a larger working surface area.
- All exterior panels in Stainless Steel with Scotch Brite finishing.
- AISI 304 stainless steel worktop, 2mm thick.
- Model has right-angled side edges to allow flush fitting joints between units, eliminating gaps and possible dirt traps.
- Non-scratch cooking surface 20mm thick for optimum grilling results and ease of use.
- Cooking surface 2/3 smooth and 1/3 ribbed.

Included Accessories

- 1 of Scraper for smooth plate for fry tops — PNC 164255
- 1 of Scraper for ribbed plate fry tops - kit includes knife blades for both smooth and ribbed surface — PNC 206420

Optional Accessories

- Scraper for smooth plate for fry tops — PNC 164255 ❑
- Support for bridge type installation, 1200 mm — PNC 206139 ❑
- Support for bridge type installation, 1400 mm — PNC 206140 ❑
- Support for bridge type installation, 1600 mm — PNC 206141 ❑
- Water drain for fry tops HP — PNC 206345 ❑
- Scraper for ribbed plate fry tops - kit includes knife blades for both smooth and ribbed surface — PNC 206420 ❑
- - NOT TRANSLATED - — PNC 206455 ❑
- Pressure regulator for gas units — PNC 927225 ❑

Modular Cooking Range Line EVO900 1200mm Gas Fry Top HP, Smooth and Ribbed scratch resistant chromium Plate

Top

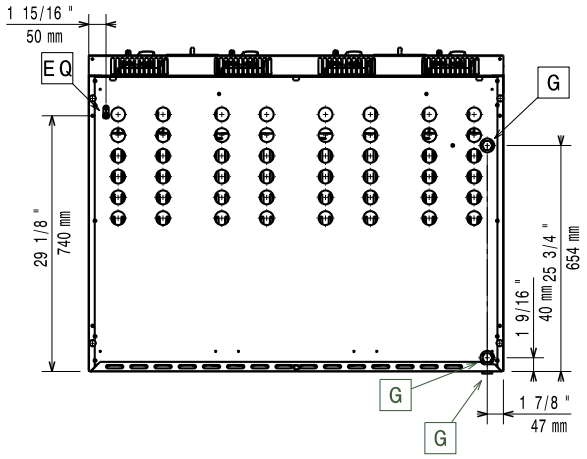

Front

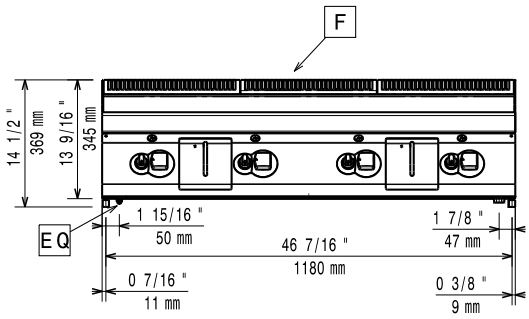

EQ = Equipotential screw
G = Gas connection

Side

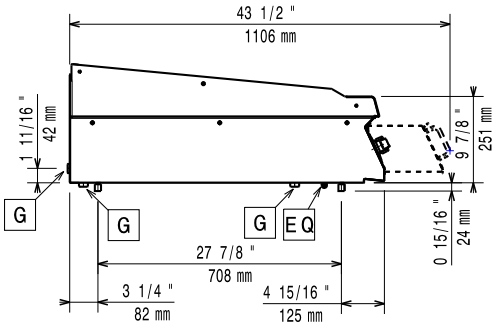

Gas

Gas Power:	33 kW
Standard gas delivery:	Natural Gas G20 (20mbar)
Gas Type Option:	LPG;Natural Gas
Gas Inlet:	1/2"

Key Information:

Working Temperature MIN:	90 °C
Working Temperature MAX:	270 °C
External dimensions, Width:	1200 mm
External dimensions, Depth:	930 mm
External dimensions, Height:	250 mm
Net weight:	150 kg
Shipping weight:	197 kg
Shipping height:	600 mm
Shipping width:	1040 mm
Shipping depth:	1300 mm
Shipping volume:	0.81 m³
Cooking surface width:	1194 mm
Cooking surface depth:	610 mm

If appliance is set up or next to or against temperature sensitive furniture or similar, a safety gap of approximately 150 mm should be maintained or some form of heat insulation fitted.

The company reserves the right to make modifications to the products without prior notice. All information correct at time of printing.

2026.04.06